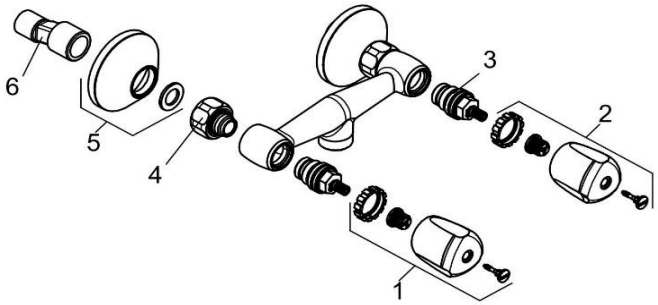

262020508		Brausearmatur DN 15	shower mixer DN 15
1	7542205-00	GRIFF	HANDLE
2	7542105-00	GRIFF	HANDLE
3	7521800-00	OBERTEIL	HEAD PART
4	7538005-00	WANDARMATURENANSCHLUSS	WALL CONNECTING NIPPLE
5	7517905-00	ROSETTE	ESCUTCHEON
6	7655204-00	S - ANSCHLUSS	S - CONNECTIONS