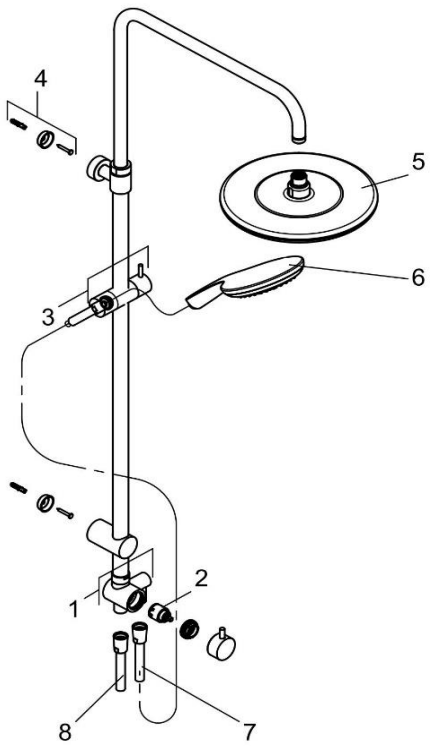

6709005-00		Shower Duo	Shower Duo
1	7317905-00	UMSTELLUNG	DIVERTER
2	7405600-00	DIVERTER KARTUSCHE	DIVERTER CARTRIDGE
3	7317605-00	GLEITSCHIEBER	GILDER
4	7464400-00	BEFESTIGUNGSSATZ	MOUNTING KIT
5	6751105-00	KOPFBRAUSE	HEADSHOWER
6	6790005-00	HANDBRAUSE	HANDSHOWER
7	6107205-00	BRAUSESCHLAUCH	SHOWER HOSE
8	7312405-00	BRAUSESCHLAUCH	SHOWER HOSE