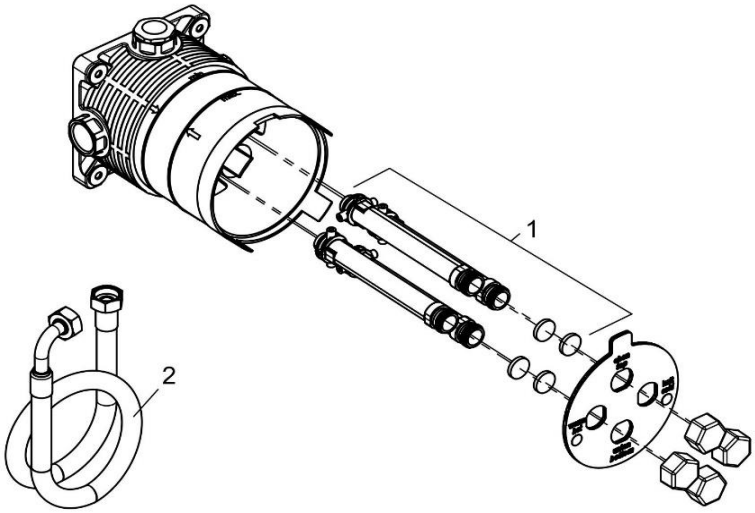

-> 03.2017

88011		UP Rohbau-Set	concealed electronic body
1	7301200-00	SPÜLSET	RINSE SET
2	6115000-00	DRUCKSCHLAUCH	PRESSURE HOSE